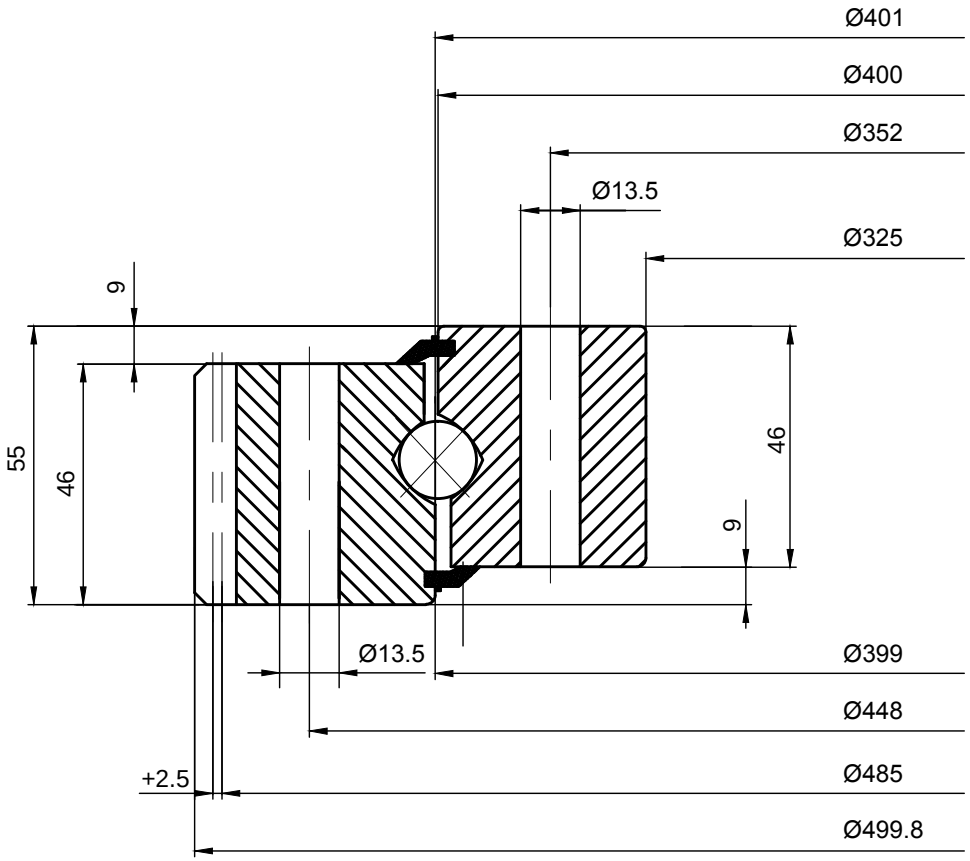

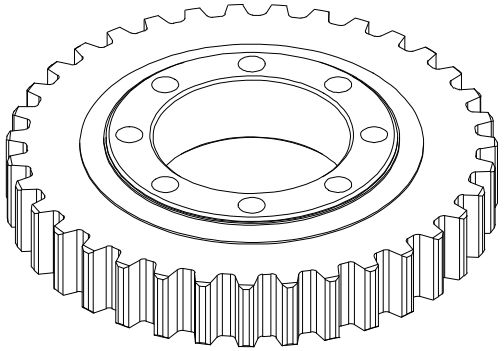

LILY® SHANGHAI LILY BEARING LIMITED
https://www.lily-bearing.com/

SERIES 06 SLEWING BEARINGS	PART NUMBER 061.20.0400.101.21.1503