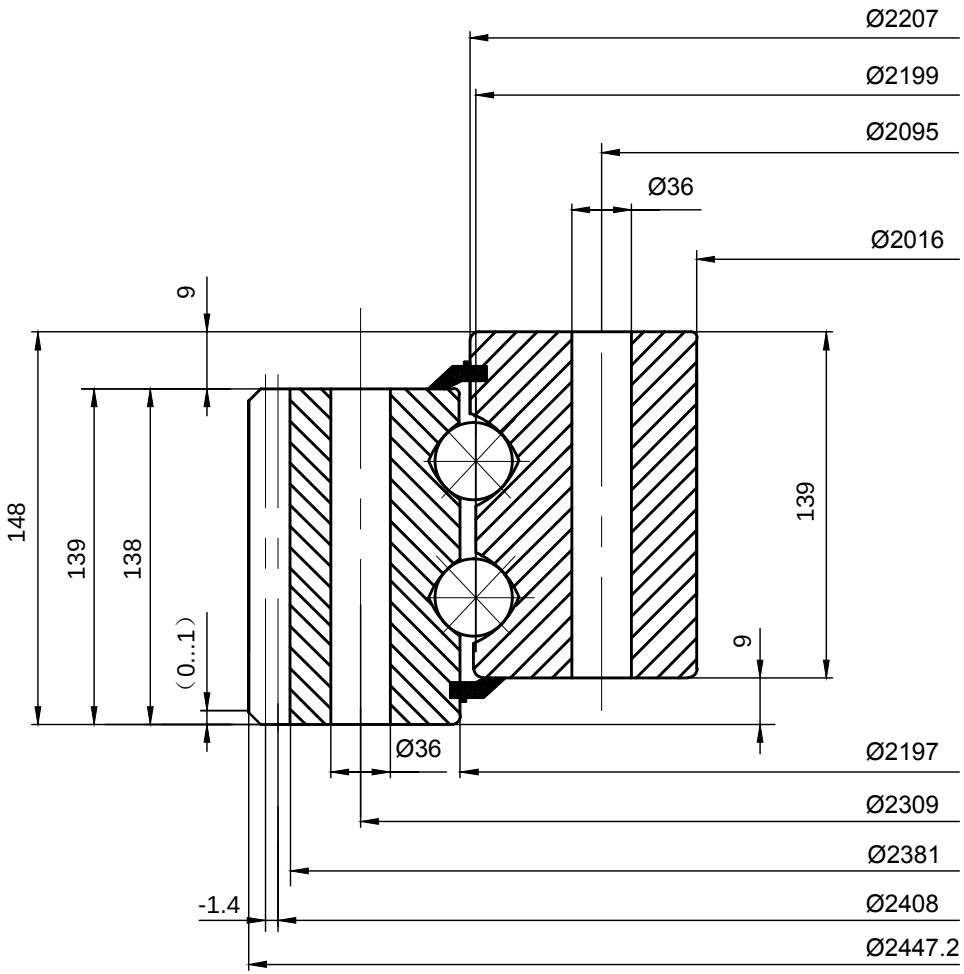


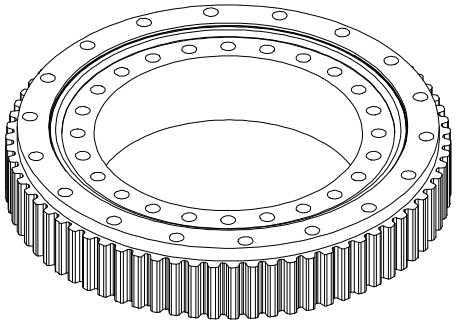

LILY® SHANGHAI LILY BEARING LIMITED
https://www.lily-bearing.com/

| | |
|---|---|
| SERIES 09<br>SLEWING BEARINGS | PART NUMBER<br>091.40.2199.991.41.1502 |