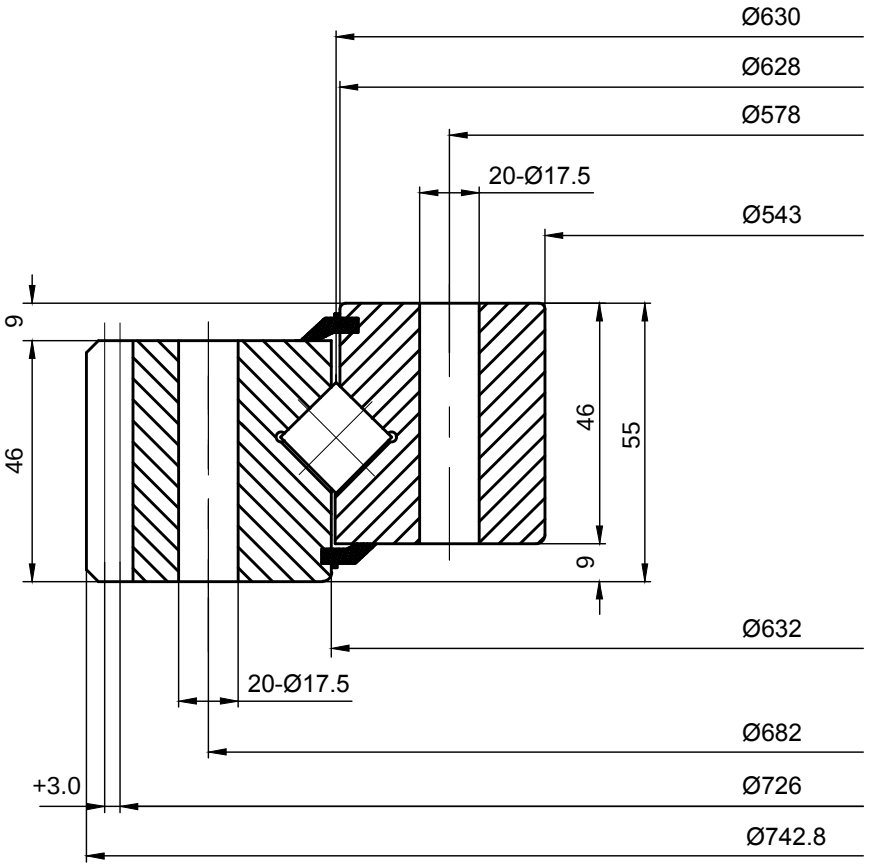


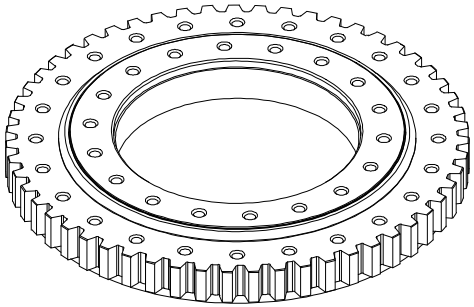

LILY® SHANGHAI LILY BEARING LIMITED
https://www.lily-bearing.com/

| | |
|---|---|
| SERIES RD 800<br>SLEWING BEARINGS | PART NUMBER<br>161.16.0630.890.11.1503 |