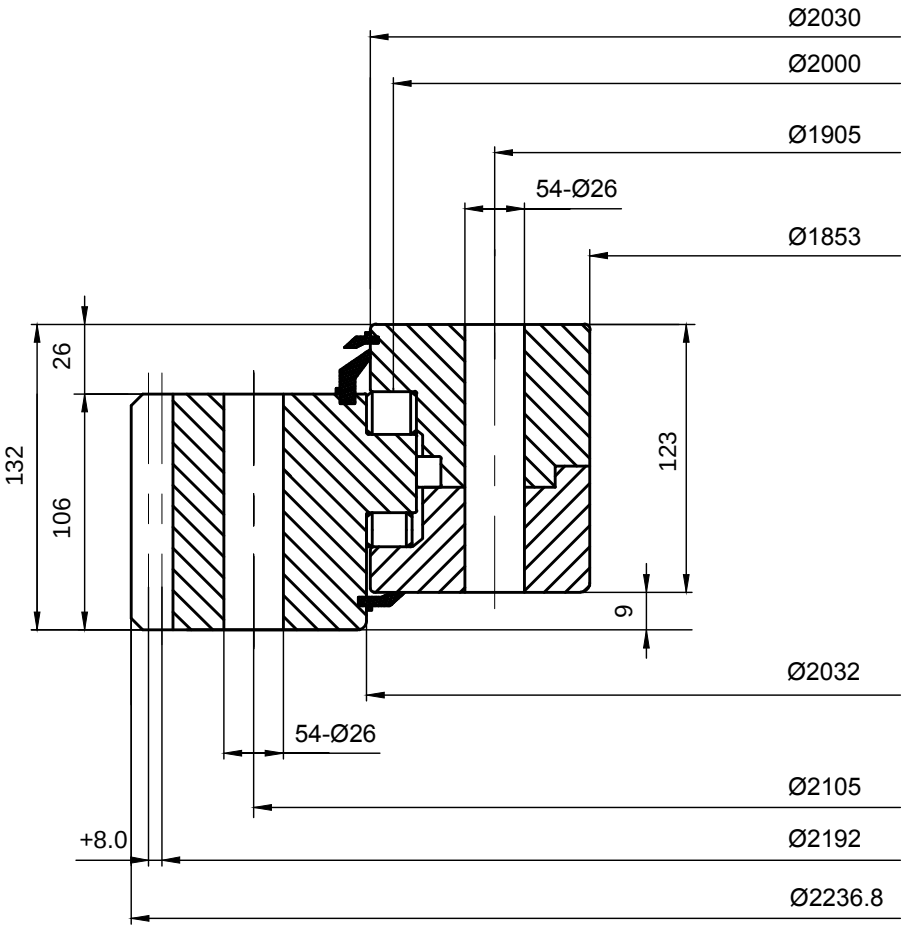

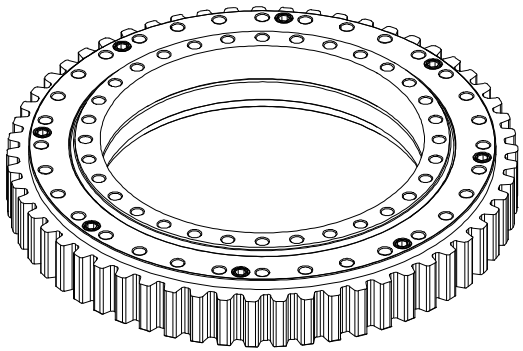

LILY® SHANGHAI LILY BEARING LIMITED
https://www.lily-bearing.com/

SERIES 19 SLEWING BEARINGS	PART NUMBER 191.20.2000.990.41.1502