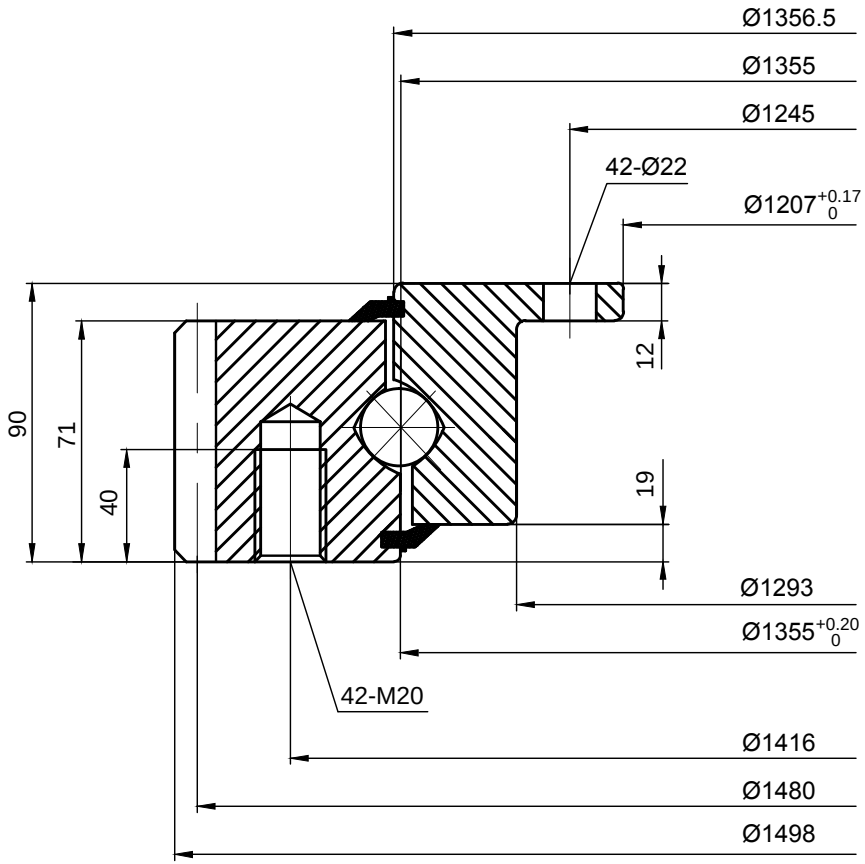

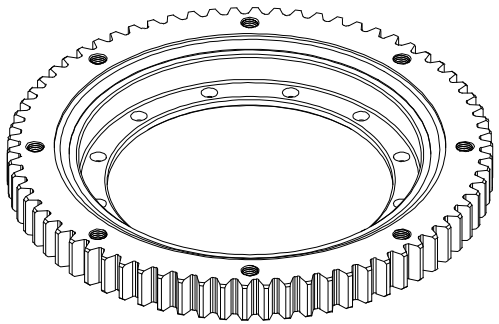

LILY® SHANGHAI LILY BEARING LIMITED https://www.lily-bearing.com/	
SERIES KD 210 SLEWING BEARINGS	PART NUMBER 281.30.1375.013 Typ 110/1500.1