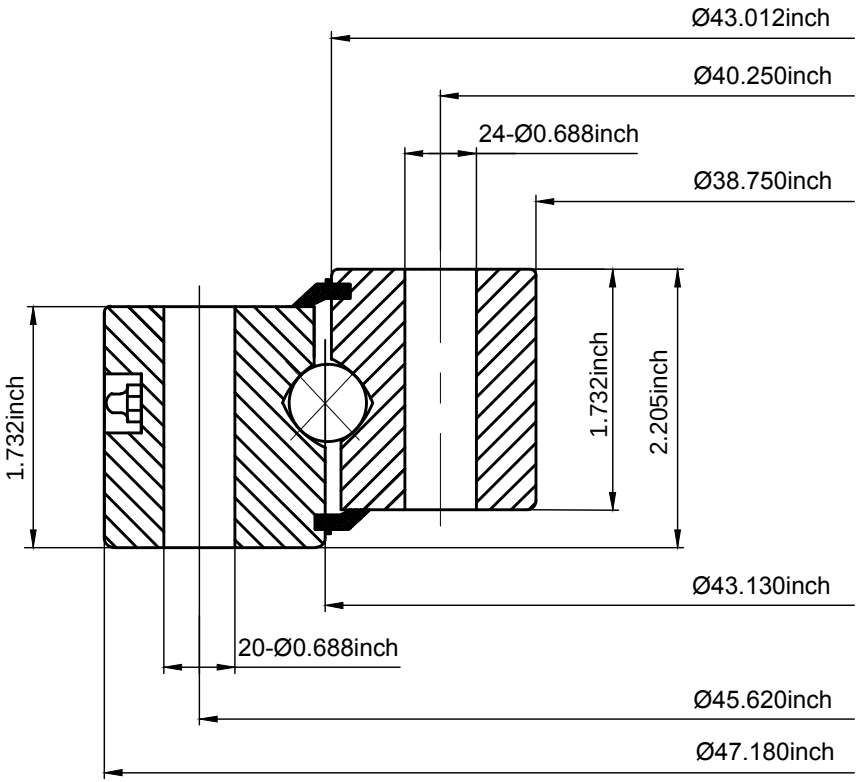

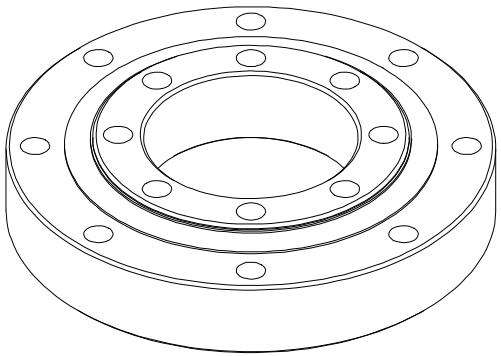

LILY® SHANGHAI LILY BEARING LIMITED https://www.lily-bearing.com/	
SLEWING BEARINGS	PART NUMBER 10-20 1091/0-32072