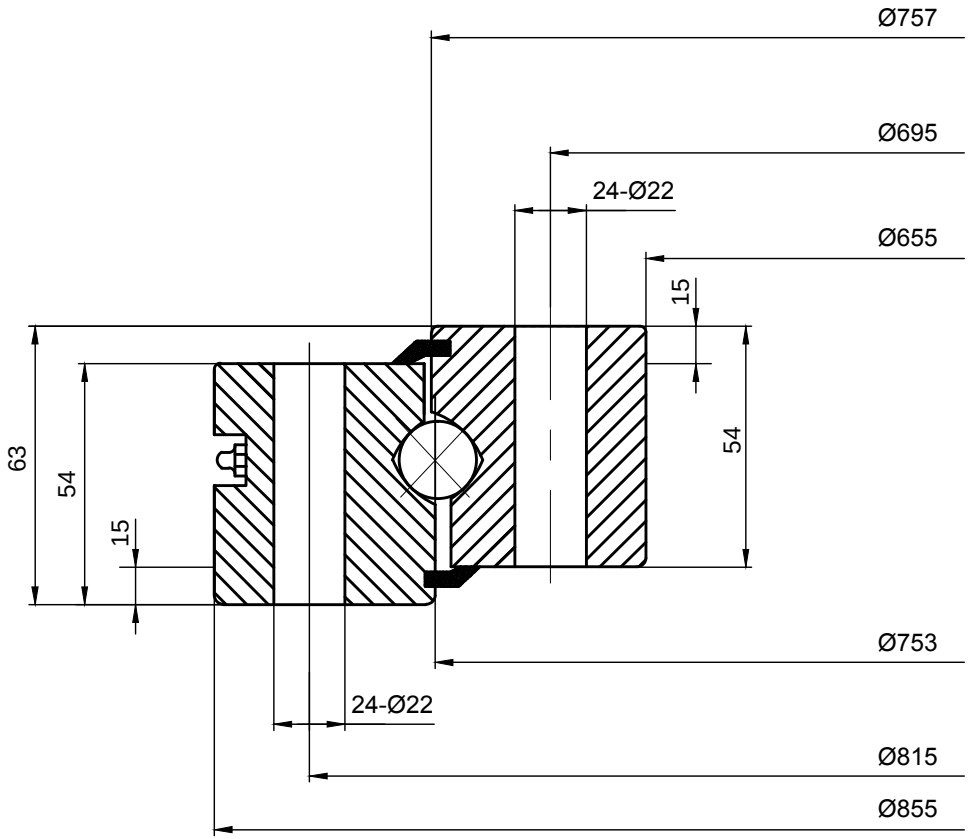

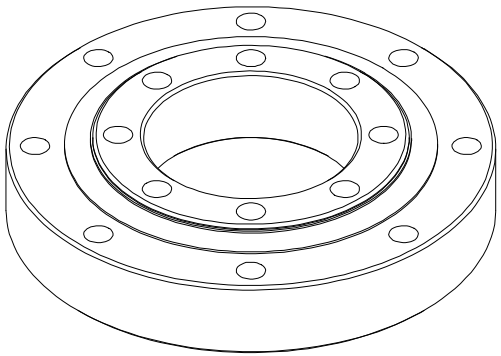

LILY® SHANGHAI LILY BEARING LIMITED https://www.lily-bearing.com/	
SERIES VSU25 SLEWING BEARINGS	PART NUMBER VSU250755