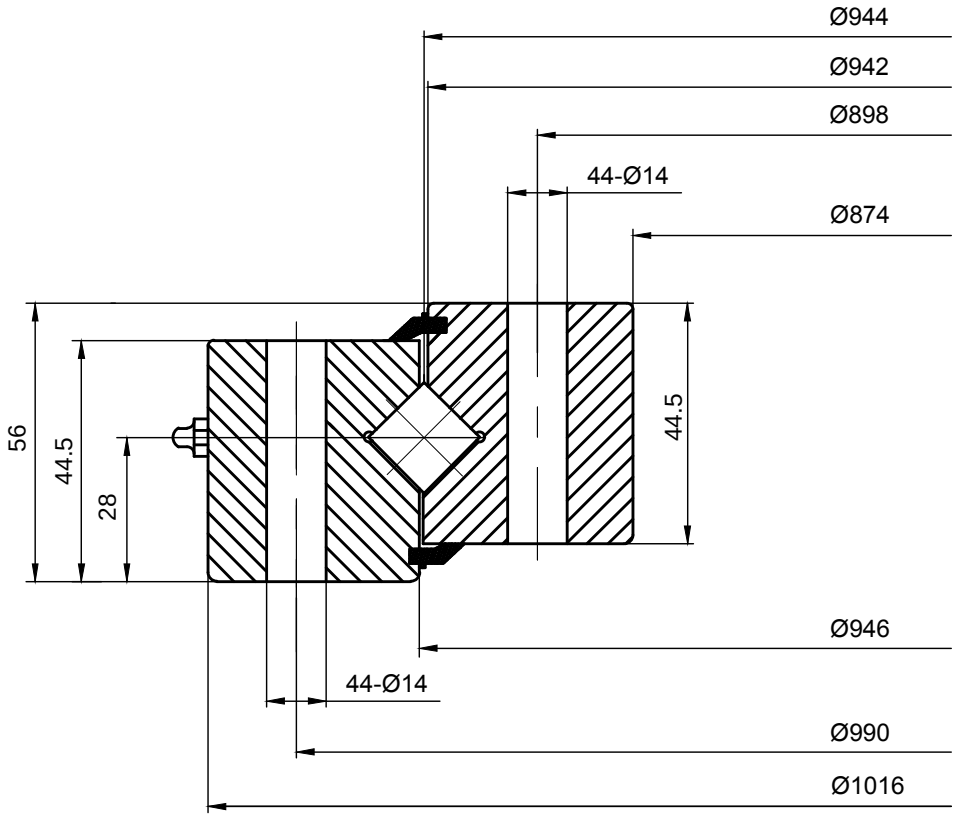

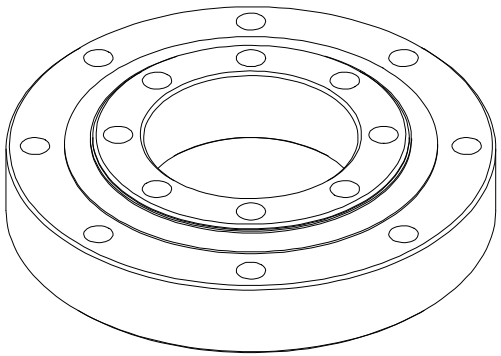

LILY® SHANGHAI LILY BEARING LIMITED https://www.lily-bearing.com/	
SLEWING BEARINGS	PART NUMBER RKS.160.14.0844